CS3000™
Users Manual

Intercomp Co.
3839 County Road 116
Medina, MN 55340

(763)-476-2531
1-800-328-3336
Fax: 763-476-2613
www.intercompcompany.c

Manual#: 700435-A

Table of Contents

Introduction

This manual contains specifications, operation instructions, and calibration instructions for Intercomp's model CS3000 crane scale.

Specifications

Controls

General:	Tare, lb/kg, Zero, Mode, Accum/Total, On/Off
Display:	5 1/2 digit, 1 inch liquid crystal display (LCD), with automatic back lighting.

Electrical

Batteries:	8 X D-size alkaline
Battery life:	3000 hours (4 months continuous use) 9000 hours in Stand-by mode.
Filtering:	Adjustable averaging up to 30 seconds.
Stand-by Mode:	Scale goes into stand-by when shut off via RFX remote, or after adjustable time without use or motion. When in 'stand-by' mode, scale can be turned on with the RFX remote.
Auto-Zero:	Satisfies all HB-44 requirements.

Performance

Speed	4 display updates per second
Accuracy	± 0.1% of reading or ± 1 display graduation, whichever is greater.
Calibration interval	Twelve months recommended

Environmental

Humidity	10 to 95% Non-Condensing.
Temperature	Operating: -28 C to +65 C. / -20 F to +150 F.
	Storage: -40 C to +75 C. / -40 F to +170 F.
EMI/RFI	Meets Mil Spec 461

Radio

Radio frequency	ISM 2.4GHz, 802.15.4
License requirements	None. Pre-approved US/FCC, CAN/IC, EUR/CE
Range	200' / 60m indoor, 300' / 90m line of sight

WARNING: This equipment has been approved for mobile applications where the equipment should be used at distances greater than 20cm from the human body (with the exception of hands, wrists, feet, and ankles. Operation at distances less than 20cm is strictly prohibited.

Physical

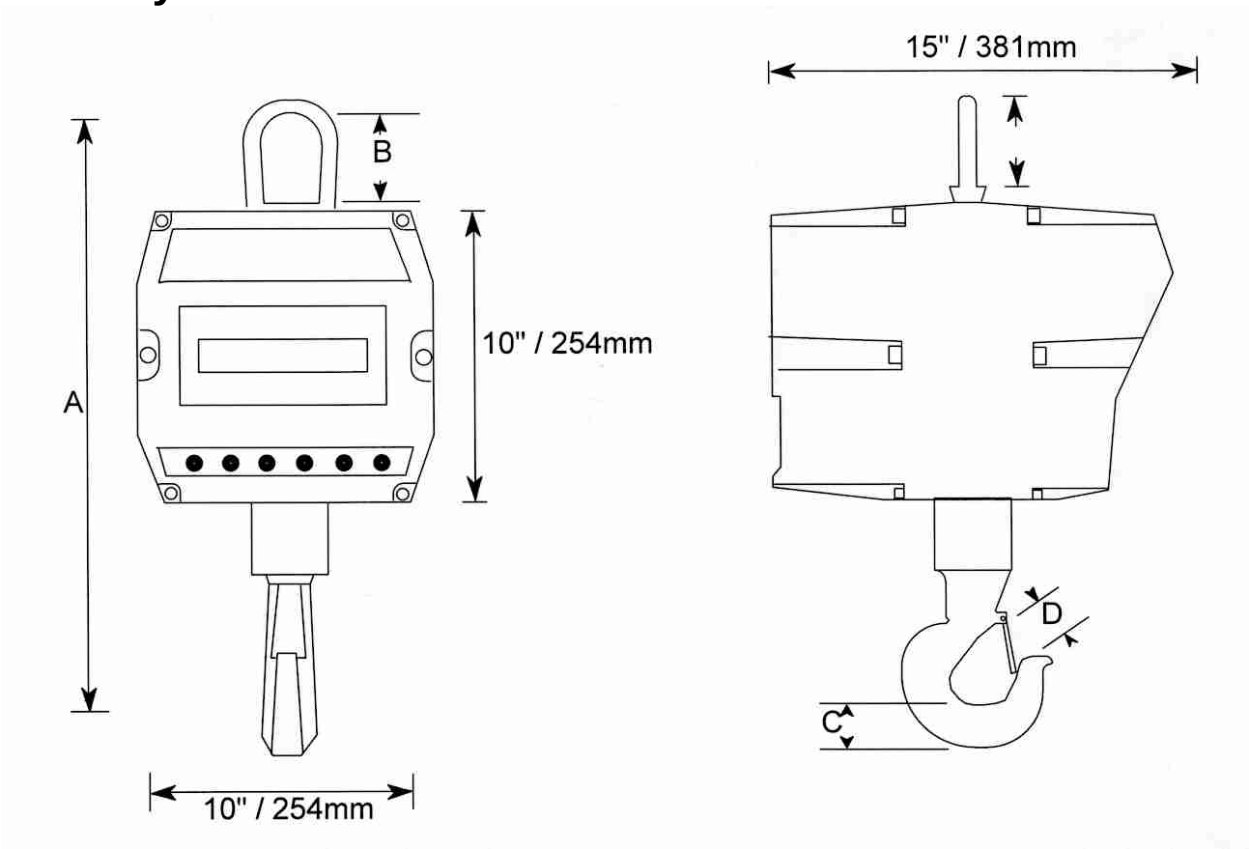

	Capacity	Graduation		A	B	C	D	*	Hook	Eye nut or shackle	Approx Weight
	500 lb 250 kg	0.2 lb 0.1 kg	**in:** **mm:**	19.3 490	3.06 77.7	1.44 35.1	1.41 35.8	The dimensions below are top to bottom shackle, eye to eye on 25-50 ton / 12.5 – 25 metric ton models	C/L 3 ton S1 swivel	C/L #7 eye nut	48 lb 22 kg
	2,000 lb 1,000 kg	1 lb 0.5 kg	**in:** **mm:**	19.3 490	3.06 77.7	1.44 35.1	1.41 35.8		C/L 3 ton S1 swivel	C/L #7 eye nut	50 lb 23 kg
	5,000 lb 2,500 kg	1 lb 0.5 kg	**in:** **mm:**	22.0 558	3.06 77.7	1.82 44.5	1.69 42.9		C/L 5 ton S1 swivel	C/L #7 eye nut	58 lb 26 kg
	10,000 lb 5,000 kg	2 lb 1 kg	**in:** **mm:**	22.0 558	3.06 7.77	1.75 44.5	1.69 42.9		C/L 5 ton S1 swivel	C/L #7 eye nut	58 lb 26 kg
	20,000 lb 10,000 kg	5 lb 2 kg	**in:** **mm:**	37.15 944	6.25 159	2.60 65.8	2.41 61.2		C/L 10 ton S1 swivel	C/L # 11 eye nut	97 lb 44 kg
	30,000 lb 15,000 kg	10 lb 5 kg	**in:** **mm:**	39.15 994	6.25 159	3.00 76.2	3.19 81.3		C/L 15 ton S1 swivel	C/L # 11 eye nut	122 lb 55 kg
*	50,000 lb 25,000 kg	10 lb 5 kg	**in:** **mm:**	43.5 1105	6.00 152	3.66 93.0	3.62 92.0	17.0 432	C/L 25 ton S1 swivel	C/L 40 ton #2140	220 lb 100 kg
*	70,000 lb 35,000 kg	20 lb 10 kg	**in:** **mm:**	48.6 1234	6.00 152	4.56 116	3.75 92.3	17.0 432	C/L 35 ton S1 swivel	C/L 40 ton #2140	248 lb 113 kg
*	100,000 lb 50,00 kg	20 lb 10 kg	**in:** **mm:**	56.0 1422	7.75 197	5.06 129	4.25 108	18.0 457	C/L 45 ton S1 swivel	C/L 50 ton #2140	392 lb 178 kg

Weights and Measures

The CS3000 meets or exceeds class III standards for 3000 division accuracy from 500 lb to 70000 lb. The certification was completed by the National Type Evaluation Program (NTEP)s in accordance with the National Institute of Standards and Technology (NIST) Handbook 44. A NTEP Certificate of Conformance Number 97-135A4 was issued under the National Conference of Weights and Measures.

Parts and Optional Equipment

Oversized top lifting eye (100744)
This part is applicable to 500 lb - 10,000 lb capacity models.

Oversized top shackle (100745)
This part is applicable to 20,000 lb and 30,000 lb capacity models.
Oversized top shackle (100746)
This part is applicable to 50,000 lb and 70,000 lb capacity models.
Oversized top shackle (100747)
This part is applicable to 100,000 lb capacity models.

Anti heat shield (100671)
Protection against high heat. Includes oversized hook and custom swivel. Contact Intercomp to a fill out a questionnaire.

RS232 Serial data output (100861)
The CS3000 has an optional RS232 connection so the unit may communicate with a computer, printer, or remote display.

Direct Power on crane unit, 120V / 220V power cable (101055)
120V or 220V power instead of batteries. This option installs the circular connector to the CS3000 which contains the power and serial output pins. Option also includes the 10 ft. retracting coiled power cable. Wall mount 120/220V power supply includes international adapters for U.S, Europe, UK, and Asia.

Operations

Display

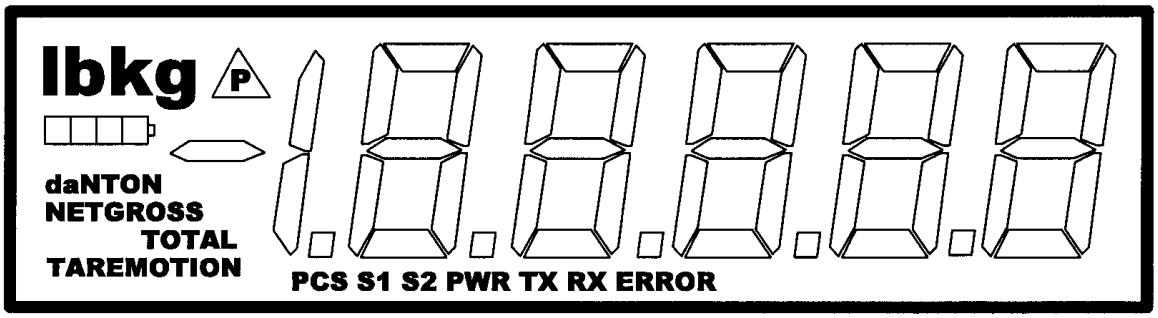

Controls

ON / OFF ⏻

Press and hold this key to apply power to the weighing system electronics. Make sure to hold this key until the display responds (up to 1 second). When power is first applied, the weighing system rapidly performs self-tests of the pad and the internal electronics. When the tests have completed successfully, the system begins weighing. If a problem is detected, the screen displays an error message. If the CS3000 is powered up, press this button to turn the scale off.

Note: When the scale is turned off with this key, the scale will be fully off and not able to be turned on with the RFX wireless indicator. If you want the scale to be able to be turned on from the wireless indicator, make sure you turn off the scale with the wireless indicator.

ACCUM / TOTAL

The scale will not accumulate when the weight is negative, zero, or if the weight is in motion (when Motion Detect is enabled). A display message "Ac_Err" with error icon will be displayed if any of those conditions are present. After a successful accumulation the scale must return to zero before you accumulate the next weight. If you attempt to accumulate the next weight before allowing the scale to return to zero, a display message "Ac_Err" with error icon will be displayed.

MODE

The Mode button cycles through the scale's set-up menu (Mode Menu) when in normal run mode. When in calibration mode, this button cycles through the calibration menu. See the 'Mode Menu' and 'Calibration Menu' sections for more details.

ZERO

Tells the scale to display a zero weight. This button is used any time the scale shows a non-zero value with no weight on the hook. If you press ZERO with weight on the hook, that weight becomes the zero condition for the scale. This can be useful to cancel the weight of any weighing fixtures, such as containers, chains or cables. When this weight is removed, a negative weight shows until the system is zeroed again. If 'Motion Detect' (see Calibration Menu) is enabled, the "zero" command will be rejected any time a change in weight is detected. You must wait until the weight is stable before the zero command is allowed.

NOTE: The scale contains a feature called Auto Zero Tracking (AZT), which corrects for slight zero changes during normal operation. If small weights are added slowly, the scale will zero them off.

Lb/Kg

Toggles the weighing system between pound (English) and kilogram (SI metric) units of measure. The current unit of measure is shown in the top left of the indicator display.

TARE

Pressing the TARE button will set the tare equal to the current gross weight of everything hanging on the scale and switch the display to net weight. This is shown by NET being displayed on the indicator on the left. The net weight is equal to the gross weight minus the tare weight. If TARE is pressed when a tare is already set, the display will briefly show the current tare weight before returning to net weight display. The tare weight will only be set if the current gross weight is positive.

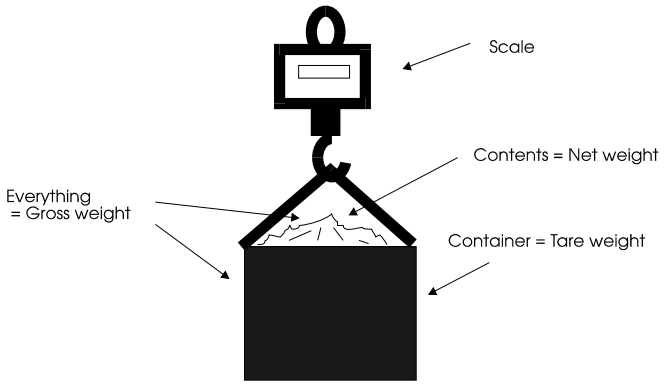

Clearing the tare:
Pressing both the TARE and Zero buttons to reset the tare to zero and return the scale to the GROSS weighing status.

Mode Menu

Press the mode button to access the Mode menu. The display will show "Pr int". If it shows "StEP", then the calibration button needs to be pressed to return to normal RUN mode, which will allow entry into the Mode Menu when mode is pressed again. (Or enter '5' for the "StEP" entry which will bring you to this Mode Menu.)

At times it will be necessary to enter up to a five digit number. When this is necessary the current number will be displayed with the right most digit flashing. The flashing digit may be incremented by pressing the Lb/Kg button or decremented by pressing the ZERO button. To move one digit to the left, press the TARE button. When you have finished entering a number, press the Mode button. The settings are saved every time Mode is pressed to advance the menu, and the scale can then be turned off.

Step	Function	Note	Default
Pr int	Print	Yes or no	no
b.L itE	Back light	On, off, or Auto	AUto
SEtP 1	Set Point 1	0 to 19999	199999
SEtP2	Set Point 2	0 to 19999	199999
uEr.	Firmware Version	View only	XXXXX
A. rt	Average rate	1 to 120	004
A.tHrS	Average Threshold	1 to 10000	00000
A oFF	Auto off	000 = off, 1 to 240	060
Prt t	Print Mode	0 = On-demand, 1 = Continuous	0
PbAUd	Printer baud rate	1200, 2400, 4800, 9600, 19200, 38400, 57600, or 115200	9600
SC id	Scale ID	1-190	001
SCLS	Number of scales	1-32	01
Proto	Protocol	StAnd, Lo Pr, C.LOOP, or nonE	Lo Pr
i.bAUd	RS485 Interface baud rate	9600 or 115200	9600
rAd io	Radio Enable	Yes or no	YES
rF CH	Radio Channel	01 to 12	01
rF.PAn	Radio Network ID	0 to 65534	8000
rF.ECP	Radio encryption enable	Yes or no	no
	Radio Encryption Key	0 to 65534	00000
rF.dEF	Restore Radio Defaults	0 or 3	0

Setting the Mode Menu Parameters

1. Press the mode button to access the Mode menu. The display will show "Pr int". This will allow the user to activate the print function by selecting "YES" or bypass printing by selecting "no". Press either the zero button or the lb/kg button to toggle the display. When the desired setting is displayed press the mode button to continue through the mode menu.

2. The display will show "b.L itE". Press the Mode button. The flashing display shows the current setting. Press either the zero button or the lb/kg button to toggle through Auto, on, and off. With 'Auto' selected (default), the backlight will automatically light up when low level light conditions are detected. When the desired setting is displayed press the mode button to continue through the mode menu.

3. The display will show "SEtP 1". Press the Mode button. The display shows the current setting. When the weight displayed is equal to or greater than the set point, the corresponding icon is displayed on the LCD. During normal weighing mode, the S1 icon on the display will light when the weight is greater than or equal to set point 1. The flashing digit may be incremented by pressing the Lb/Kg button or decremented by pressing the ZERO button. To move one digit to the left, press the TARE button. When the display shows the desired number, press the mode button to continue through the mode menu.

4. The display will show "SEtP2". Press the Mode button. The display shows the current setting. During normal weighing mode, the S2 icon on the display will light when the weight is greater than or equal to set point 2. The flashing digit may be incremented by pressing the Lb/Kg button or decremented by pressing the ZERO button. To move one digit to the left, press the TARE button. When the display shows the desired number, press the mode button to continue through the mode menu.

5. The display will show "uEr". Press the Mode button and the display will show the current version of firmware loaded in the scale. (view only function) Press the Mode button.

6. The display will show "A. rt". Press the Mode button. The display shows the current setting. This number is how many readings will be averaged together before the reading is sent to the display. Higher values will result in a more stable reading, but will take longer to settle to the final value. Note that the scale updates at 4Hz, so an Average Rate of '8' equates to 2 seconds of averaging. Enter a '1' to effectively disable averaging. The flashing digit may be incremented by pressing the Lb/Kg button or decremented by pressing the ZERO button. To move one digit to the left, press the TARE button. When the display shows the desired number, press the mode button to continue through the mode menu.

7. The display will show "A.tHrS". Press the Mode button. The display shows the current **Average Threshold** setting. This setting enables dynamic averaging,

which can improve the settling time of a large Average Rate. If the scale senses a large weight change, it will temporarily suspend averaging, jump to the new weight, and resume averaging. Enter a value of 1-10000 to set the threshold (in display divisions) at which the dynamic averaging triggers. Enter ‘0’ to disable dynamic averaging. When disabled, the averaging will never be suspended. The flashing digit may be incremented by pressing the Lb/Kg button or decremented by pressing the ZERO button. To move one digit to the left, press the TARE button. When the display shows the desired number, press the mode button to continue through the mode menu.

8. The display will show “A. oFF”. Press the Mode button. The display shows the current setting. The number displayed is the minutes that the scale can remain idle before it automatically powers down into stand-by mode. Note that when the scale powers down into stand-by mode in this way, the scale can still be turned back on with the wireless indicator. Setting this number to “000” will disable the function, meaning the scale will never automatically go into stand-by mode. The flashing digit may be incremented by pressing the Lb/Kg button or decremented by pressing the ZERO button. To move one digit to the left, press the TARE button. When the display shows the desired number, press the mode button to continue through the mode menu.

9. The display will show “Prt t”. Press the Mode button. The display shows the current setting. The number enables the scales different print modes. (0 for on-demand, 1 for continuous, see ‘serial output’ for more details) The flashing digit may be incremented by pressing the Lb/Kg button or decremented by pressing the ZERO button. When the display shows the desired number, press the mode button to continue through the mode menu.

10. The display will show “PbAUd”. Press the Mode button. The flashing display shows the current setting of the printer baud rate. The baud rates available are: 1200, 2400, 4800, 9600, 19200, 38400, 57600, and 115200. Press either the zero button or the lb/kg button to toggle the display through the different settings. When the desired setting is displayed press the mode button to continue through the mode menu.

11. Message “SC id” will be displayed. Press the Mode button. A number will be displayed with 3 dashes following it. This is the scale number. The flashing digit may be incremented by pressing the Lb/Kg button or decremented by pressing the ZERO button. To move one digit to the left, press the TARE button. When the desired number is displayed, press the Mode button.

12. Message “SCLS” will be displayed. Press the Mode button. The display will show three dashes and then a number. This number is the total number of scales in the system. The flashing digit may be incremented by pressing the Lb/Kg button or decremented by pressing the ZERO button. To move one digit to the left, press the TARE button. When the desired number is displayed, press the Mode button. The maximum number of scales is 32.

13. The display will show "Proto". Press the Mode button. The flashing display shows the current setting. There are 4 protocol settings for the scale, Standard ("StAnd"), Low Power ("Lo Pr"), Current Loop ("C.LOOP"), or "nonE". Set this setting to "Lo Pr" for wireless operation with the RFX wireless indicator. Battery life will be improved if "nonE" is chosen, but this disables any wireless operation. Press either the zero button or the lb/kg button to toggle the display through the different settings. When the desired setting is displayed press the mode button to continue through the mode menu.

14. The display will show " i.bAUd". Press the Mode button. The display will show the current setting flashing. This setting is not used on the CS3000 and can be left at either of the two settings available, 9600 and 115200. Press the mode button to continue through the mode menu.

15. The display will show "rAd io". Press the Mode button. The display will show the current setting flashing. This is the radio enable status and is either on or off. Set this setting to "YES" for wireless operation with the RFX wireless indicator. Set this setting to "no" to disable wireless operation which will also increase battery life. If you select "no" the scale will skip the rest of the settings and return to normal weighing. Press either the zero button or the lb/kg button to toggle the display. When the desired setting is displayed press the mode button to continue through the mode menu.

16. The display will show "rF CH". Press the Mode button. The flashing digit shows the current setting. All scales and indicators in a system must be set to the same radio channel setting in order to communicate with each other. The flashing digit may be incremented by pressing the Lb/Kg button or decremented by pressing the ZERO button. To move one digit to the left, press the TARE button. When the desired number is displayed, press the Mode button.

17. The display will show "rF.PAn". Press the Mode button. The display will show the current setting with the number on the right flashing. All scales and indicators in a system must be set to the same Personal Area Network ID setting in order to communicate with each other. The flashing digit may be incremented by pressing the Lb/Kg button or decremented by pressing the ZERO button. To move one digit to the left, press the TARE button. When the desired number is displayed, press the Mode button.

18. The display will show "rF.ECP". Press the Mode button. The display will show the current setting flashing. This is the encryption enable status and is either on or off. Use the Lb/Kg button or the ZERO button to toggle between the settings. When the desired status is flashing, press the Mode button. If "YES" was selected go to the next step. If "no" was selected skip the next step. The display will show "00000" with the number on the right flashing. The flashing digit may be incremented by pressing the Lb/Kg button or decremented by pressing the ZERO button. To move one digit to the left, press the TARE button. Enter any number from 0 to 65534. This is the encryption key. For security purposes, this setting is

not accessible to view and will always show as "00000". If you don't want to change the key enter "00000" to leave it unchanged. All scales and indicators in a system must be set to the same encryption key setting in order to communicate with each other. When the desired number is displayed, press the Mode button

19. The display will show "rF.dEF". Press the Mode button. The display will show "0" with the number flashing. The flashing digit may be incremented by pressing the Lb/Kg button or decremented by pressing the ZERO button. Setting the number to 3 will restore the default radio settings. All other numbers will have no affect on the radio set-up. When the desired number is flashing, press the Mode button. The scale will return to normal weighing.

Accum / Total Use

To use the accumulating total function, press the "ACCUM TOTAL" button once a load is placed on the scale. The display will briefly show "AC. 1" indicating that the first accumulation has been taken. Each subsequent accumulation will briefly display "AC. **X**". (X will be the number of the accumulation that has taken place)
The "PRINT" functions will be covered after this section.

Accumulation Errors

The scale will not accumulate when the weight is negative, zero, or if the weight is in motion. A display message "Ac.Err" with error icon will be displayed if any of those conditions are present. (If in motion the "**MOTION**" icon will also be displayed.) After a successful accumulation the scale must return to zero before you accumulate the next weight. If you attempt to accumulate the next weight before allowing the scale to return to zero, a display message "Ac.Err" with error icon will be displayed.

Motion Detection System

The scale has a motion detection system that can be enabled or disabled from the "Calibration" menu. See "Calibration Menu" section for instructions in setting the motion detection system.

When enabled, any motion of the load will disable the zero, tare, print, and accum functions. When accumulating, the message "Ac_Err" with the 'MOTION' icon will be displayed. When attempting to zero, print, of tare the scale the display will show "--- " with the 'MOTION' icon.

Serial Output (Optional)

The serial output is accessed through the mode menu under the "Prt t" option. If "0" is entered it will print on-demand by following the following steps.

1. Press the mode button. The display will show "Pr int".
2. Press the mode button once more. Toggle the display to "YES" by pressing the lb/kg button.
3. Press the mode button once more and the print command will be sent. After the print command is sent the scale will return to normal operations. If accumulating all accumulations will be retained.

If "1" is entered it will print in continuous mode. When in continuous mode a print command will be sent approximately one line per second.

Print Output Examples

On-demand print mode

GROSS: 1999.8 lb (No tare or accum total)

GROSS: 1999.8 lb (A tare is set)
TARE: 999.8 lb
NET: 1000.0 lb

GROSS: 1999.8 lb (Accumulated total and tare set)
TARE: 999.8 lb
NET: 1000.0 lb
ACC.TOT: 2000.0 lb

GROSS: 1999.8 lb (Accum total, but no tare)
ACC.TOT: 2000.0 lb

Continuous print mode

1999.8 lb
1999.8 lb
1999.8 lb

Scoreboard

The CS3000 can be connected to output to a scoreboard (continuous).

The signal comes out of the Serial I/O connector located on the side of the unit. The connector has the following pinout:

Signal	Pin
TXD	F
GND	B

The transmitted signal has the following characteristics:

Fixed 8 Data bits, no parity, 1 stop bit.
Baud rate is configurable with the ‘printer baud rate’ setting, in the ‘Mode Menu’.
The output swings from -9 VDC to 9 VDC.

The scoreboard output is an externally available signal designed to drive a numeric overhead display board or a computer's RS-232 input.

Continuous print mode transmitted data: xxxxxxx<cr><lf>

This represents the NET or GROSS weight, whichever is currently shown on the CS3000 display. This data is repeatedly sent out about once a second, with the exception that the transmission is delayed whenever there is motion.

The xxxxxxx field will vary in length depending on the length of the number and could contain a decimal point and/or a minus sign.

The scoreboard is designed to work with Intercomp's S400 (4 inch) and SA2000 (2 inch) scoreboards. The following describes how to configure the S400 or SA2000 to work with the scoreboard output.

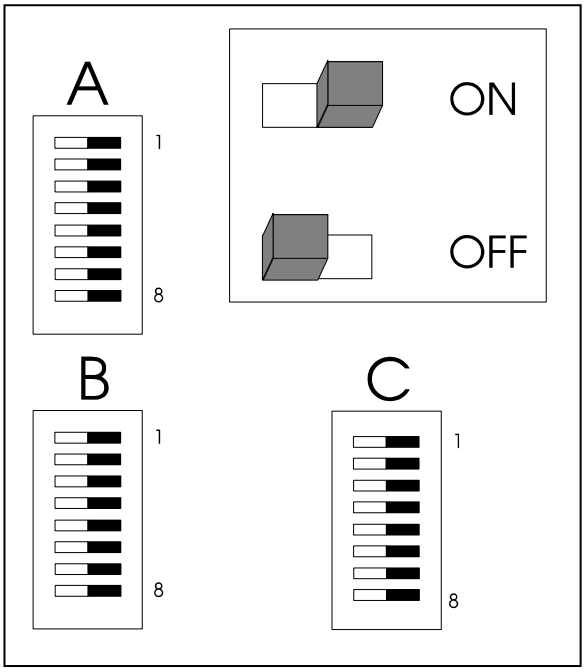

The above diagram is the S400 switch pack layout, The SA2000 has pack C below B. The switch is to the right for on and to the left for off.

Switch #	Pack A	Pack B	Pack C
1	OFF	OFF	See next page
2	ON	ON	"
3	ON	OFF	"
4	ON	OFF	"
5	ON	ON	ON
6	OFF	ON	ON
7	OFF	ON	OFF
8	ON	ON	OFF

The above switches should be set on switch packs A, B, and C.

Pack C, SW 1 to 4:

Baud Rate	C-1	C-2	C-3	C-4
9600	ON	ON	ON	OFF
4800	OFF	ON	ON	OFF
2400	ON	ON	OFF	OFF
1200	OFF	OFF	ON	OFF
600	ON	OFF	OFF	ON
300	OFF	ON	OFF	OFF
150	ON	OFF	OFF	OFF
75	OFF	OFF	ON	ON

The connection to an Intercomp S400 display is:

CS3000	S400
TXD (F)	2 (RXD)
GND (B)	7 (GND)

The connection to an Intercomp SA2000 display is:

CS3000	SA2000
TXD (F)	3
GND (B)	7

The connection to a 9-pin PC communication port is:

CS3000	PC 9-pin
TXD (F)	2
GND (B)	5

Note: For some setups it may be necessary to jump pins [6, 1, and 4] together, and pins [7 and 8] together on the PC port connector.

The connection to a 25-pin PC communication port is:

CS3000	PC 25-pin
TXD (F)	3
GND (B)	7

Note: For some setups it may be necessary to jump pins [6, 8, and 20] together, and pins [4 and 5] together on the PC port connector.

Maintenance

Calibration Menu

To initiate calibration press the Mode button. The display will show "StEP", if it does not, the calibration button needs to be pressed to toggle to allow calibration.

The calibration of the scale is protected from accidental change by a switch. The switch is protected by an access plug. The access plug is located on the back of the scale, and is covered by a calibration sticker (seal). The switch is set in the "calibration blocked" mode at the factory.

Enabling the Calibration switch
First, remove the calibration sticker which covers the access plug. Using a ¼" Allen wrench, remove the access plug. Insert the Allen wrench in to the hole and press the switch once. The scale is now set to allow calibration.

Step	Function	Note	Default
StEP	skip	000= no skip 002= skip to weight calibration 005= skip to Mode menu	000
U. EnA	Unit switch enable	Yes or no	YES
-dEt-	Motion Detect	Yes or no	no
AdC.rt	ADC rate	0 or 1	0
AZt	AZT (auto zero tracking)	1 d, 3 d, .5 d, oFF, or.6 d	1 d
ZErO.r	Zero range	0= off, 1= 1%, 2= 2%, 3= 5%, 4 = 1%	0
GrAd	graduation size	0.02, 0.05, 0.1, 0.2, 0.5, 1, 2, 5, 10, 20, 50, or 100	d 1
	SAuE	Displays for 1 sec and advances	
CAP	capacity	Enter scale capacity	60000
LL-00	No weight applied		
HH-01	First weight	Enter first weight	
LL-01	First weight	Load first weight	
HH-02	Second weight	Enter second weight	
LL-02	Second weight	Load second weight	
HH-03	Third weight	Enter third weight	
LL-03	Third weight	Load third weight	
HH-04	Fourth weight	Enter fourth weight	
LL-04	Fourth weight	Load fourth weight	
	10 points available to enter	3 or more recommended	

Note: Number entry: The flashing digit may be incremented by pressing the Lb/Kg button or decremented by pressing the ZERO button. To move one digit to the left, press the TARE button. When you have finished entering a number, press the Mode button. The settings are saved once Mode is pressed to advance the menu, and the scale can then be turned off.

Setting the Calibration Parameters

1. At any point in the following steps, data will be retained by the scale at the step completed if the power is cycled off. To initiate calibration press the Mode button. The scale shows "StEP". Press the Mode button. The scale shows "000" with the far right number flashing. To go through all of the calibration parameters, press Mode button with the display showing "000". To skip to the weight calibration parameters and proceed to step 8 enter "002". See "Troubleshooting" section for additional codes available. The flashing digit may be incremented by pressing the Lb/Kg button or decremented by pressing the ZERO button. To move one digit to the left, press the TARE button. When the desired number is displayed, press the Mode button

2. The display shows "U. EnA" . Press the mode button. The display will read "YES". Pressing Lb/Kg or the ZERO button will toggle the display to "no", which disables the lb/kg units switching. With the display showing "YES", press the mode button.

3. The display now shows "-dEt-". Press the mode button. The display will read the current setting. When motion detect is enabled, any motion of the load will disable the zero, tare, print, and accum functions. Pressing the Lb/Kg or the ZERO button will toggle the display. When the desired setting is displayed, press the Mode button

4. The display shows "AdC.rt". Press the mode button. The display shows the current setting flashing. This sets the internal A/D conversion time at one of two choices. An entry of '0' results in the full conversion time for the most stable results. An entry of '1' results in a reduced conversion time which extends battery life. It is recommended to leave this set to '0'. Note that if this setting is changed, the scale must be recalibrated. The flashing digit may be incremented by pressing the Lb/Kg button or decremented by pressing the ZERO button. When the desired ADC rate is displayed press the Mode button.

5. The display shows "A2t". Press the mode button. The display shows the current setting. Press the Lb/Kg or the ZERO button to cycle through the auto zero tracking options (1 d, 3 d, 0.5 d. oFF, or 0.6 d). If the displayed weight is less than the number of grads shown for a given amount of time, the weight will be zeroed off. When the desired auto zero tracking setting is displayed press the Mode button.

6. The display shows "2Er0.r". Press the mode button. The display shows the current setting flashing. The flashing digit may be incremented by pressing the Lb/Kg button or decremented by pressing the ZERO button. The zero range is the percentage the zero can move from the original zero obtained at calibration. The zero button will not work if outside the zero range; and the display will show "2Er0.r"

with the error icon lit if the zero range is set to 1, 2, or 3. If 4-6 is selected, the zero button will simply not function when an attempt is made to zero the scale outside the range. When the number for desired zero range number is displayed press the Mode button. (0=off, 1=1%, 2=2%, and 3=5%, 4=1%, 5=2%, 6=5%)

7. The display shows "GrAd". Press the mode button. The display shows the current setting with the number flashing. Press the Lb/Kg or the ZERO button to cycle through the graduation options. When the desired graduation setting is displayed press the Mode button. (grad options 0.02, 0.05, 0.1, 0.2, 0.5, 1, 2, 5, 10, 20, 50, or 100)

At this point the display will show "SAuE" for about 1 second and advance to show "CAP".

Weight Calibration

One to ten load weights need to be applied to calibrate the scale. Using multiple point calibration allows the unit to weigh more accurately; by removing undesirable characteristics of load cells. A typical weight calibration is a three point calibration. This means three different and optimal loads are applied and entered (not including the zero point). If you do not conveniently have the three different weights available, you may also use one or two point calibration. To calibrate with one point, simply turn off the scale once the display shows "HH-02". To calibrate with two points, turn off the scale once the display shows "HH-03". The CS3000 has the capability to apply and load up to 10 calibration points.

8. The display will show "SAuE" for about 1 second and advance to show "CAP". Press the Mode button. The display will show the current capacity setting with the far right number flashing. The flashing digit may be incremented by pressing the Lb/Kg button or decremented by pressing the ZERO button. To move one digit to the left, press the TARE button. Enter the capacity of the scale and press the Mode button when the scale capacity is displayed.

9. The display shows "LL-00". With no weight applied to the scale press the Mode button.

10. The display shows "HH-01". Press the Mode button. The display will show "00000" with the far right number flashing. The flashing digit may be incremented by pressing the Lb/Kg button or decremented by pressing the ZERO button. To move one digit to the left, press the TARE button. Enter the value of the first load and press the Mode button when the value of the first load is displayed.

11. The display shows "LL-01". Apply the first load to the scale. With the first load applied to the scale press Mode button.

12. The display shows "HH-02". Press the Mode button. The display will show "00000" with the far right number flashing. The flashing digit may be incremented by pressing the Lb/Kg button or decremented by pressing the ZERO button. To move one digit to the left, press the TARE button. Enter the value of the second load and press the Mode button when the value of the second load is displayed.

13. The display shows "LL-02". Apply the second load to the scale. With the second load applied to the scale press Mode button.

14. The display shows "HH-03". Press the Mode button. The display will show "00000" with the far right number flashing. The flashing digit may be incremented by pressing the Lb/Kg button or decremented by pressing the ZERO button. To move one digit to the left, press the TARE button. Enter the value of the third load and press the Mode button when the value of the third load is displayed.

15. The display shows "LL-03". Apply the third load to the scale. With the third load applied to the scale press Mode button.

16. The display shows "HH-04". Press the Mode button. The display will show "00000" with the far right number flashing. The flashing digit may be incremented by pressing the Lb/Kg button or decremented by pressing the ZERO button. To move one digit to the left, press the TARE button. Enter the value of the forth load and press the Mode button when the value of the forth load is displayed.

17. The display shows "LL-04". Apply the forth load to the scale. With the forth load applied to the scale press Mode button.

Repeat step 10 and 11 for each additional "HH-05" – "HH 10" and "LL-05"- "HH 10" combination. If the scale is turned off at any time, the calibration data acquired to that point will be retained. After the Mode button is pressed after "LL-10", the display will return to normal weighing.

Finished

Following calibration, insert the allen wrench and press the cal enable switch to disable calibration. Using a ¼" Allen wrench, replace the access plug and apply a calibration sticker to cover the access plug.

Calibration (Verify)

NOTE: The stated accuracy specifications are based on the graduation setting in the table below. If the graduation setting is set other than the value in the table below the accuracy specification remains with the graduation size listed below.

If your capacity is:	Set your graduation to:
500 lb / 250 kg	0.2 lb / 0.1 kg (8)
2000 lb / 1000 kg	1 lb / 0.5 kg (6)
5000 lb / 2500 kg	1 lb / 0.5 kg (6)
10000 lb / 5000 kg	2 lb / 1 kg (5)
20000 lb / 10000 kg	5 lb / 2 kg (4)
30000 lb / 10000 kg	10 lb / 5 kg (3)
50000 lb / 25000 kg	10 lb / 5 kg (3)
70000 lb / 35000 kg	20 lb / 10 kg (2)
100,000 lb / 45000 kg	20 lb / 10 kg (2)

To verify that the scale has maintained its calibration points, load the scale at 10% increments and ensure that the display indicates an accuracy of 1% of the load or one display division as indicated in the table above. After all 10 points have been verified the scale is complete.

Periodic Inspection

The crane scale and all associated adaptive devices require periodic inspection and maintenance. The frequency and recording of the inspection requirements are found in service categories below and are dependant on the type of service that the equipment is used in as described below.

Service Categories

Normal Service – Crane scale is operated at less than 85% of its capacity except for isolated instances. Complete the frequent service inspection monthly and record the periodic service inspection annually.

Heavy Service – Crane scale is operated at 85% - 100% of its capacity as part of normal usage. Complete the frequent service inspection weekly to monthly and record the periodic service inspection semi-annually.

Severe Service – Crane scale is operated at 85% - 100% of its capacity and used in environmental conditions that are unfavorable, harmful or detrimental to the use of the crane scale. Complete the frequent service inspection daily to weekly and record the periodic service inspection quarterly.

Inspection Requirements

Frequent Service Inspection (records not required)
A frequent visual inspection is completed at intervals indicated by the service category above by the operator or designated person of the following.

1. Inspect for structural deformation, cracks or excessive wear of any part of the crane scale or associated adaptive devices.
2. Inspect for loose or missing guards, fasteners, covers, stops, or nameplates.
3. Inspect all functional operating mechanisms and automatic hold and release mechanisms for improper adjustments interfering with operation of the crane scale or associated adaptive devices.
4. Inspect for distortion such as bending, twisting, or increased throat opening (if applicable)

Periodic Service Inspection (records required)
A periodic visual inspection is completed at intervals indicated by the service category above by the operator or designated person and documented to provide the basis for continuing evaluation. The periodic inspection will cover areas in the frequent service inspection above and the following.

1. Inspect for loose bolts or fasteners.
2. Inspect for cracked or worn gears, pulleys, sheaves, sprockets, bearings, chains, and belts.
3. Inspect for excessive wear of linkages and other mechanical parts.
4. Inspect for excessive wear at hoist hooking points and load support clevices or pins.
5. Inspect for any visible bends or twists of all used rigging devices.
6. Inspect all latches and locks for proper operation (if applicable)

Removal from Service Criteria

Note: Replacement parts of any device or parts of any device used in any aspect of rigging to lift a load shall be at least equal to the original manufacture's specifications

Hooks

Hooks shall be removed from service if damage such as the following is found and shall only be returned to service if a qualified person approves their continued use and initiates corrective action.

1. Hooks show cracks, nicks, or gouges.
2. Hook has wear exceeding 10% of the original sectional dimension.
3. Hook has any visible bend or twist from the plane of the unbent hook.
4. Hook has an increase in throat opening of 5% not to exceed ¼ of an inch.
5. If self-locking hooks have the inability to lock.
6. A hook latch that is inoperable (if applicable)

Shackles

Shackles shall be removed from service if damage such as the following is visible and shall only be returned to service when approved by a qualified person.

1. If the manufacturers name or trademark and / or the rated load identification is missing or illegible.
2. The device shows signs of heat damage including weld spatter or arc strikes.
3. The device shows excessive pitting or corrosion.
4. The device is bent, twisted, distorted, stretched, elongated, cracked, or has broken load-bearing components.
5. The device has excessive nicks or gouges.
6. The device has a 10% reduction of the original or catalog dimension at any point around the body or pin.
7. The device has incomplete pin engagement.
8. The device has excessive thread damage.
9. The device shows evidence of unauthorized welding.
10. Any other condition including visible damage that causes doubt to the continued use of the shackle.

Power/Batteries

Remove the two caps in the back of the unit. Tip the old cells out. Change the cells with standard alkaline “D” batteries, being careful to put the positive end in first (The end with the bump). Replace the battery caps. Note that the CS3000 will run off a single battery tube, but the battery life will be cut in half.

Legal-for-Trade Sealing

For qualified calibration facilities:

1. After calibration push the calibration switch. The calibration switch is located on the upper right hand corner on the backside of the scale.
2. Verify that the scale returns to normal weighing when trying to access the weight calibration.
3. Replace the set screw that covers the cal switch.
4. Apply the protection sticker (sticker must conform to Intercomp’s specifications).

Troubleshooting

Problem Table

The following table describes some symptoms with possible causes and solutions.

Symptom	**No power up, nothing on display**
If any power reaches the control panel, the display driver turns on some random segments. Since we are not seeing this we will assume that no power is reaching the scale circuitry. Some possible causes: Defective wiring harness: Inspect for damaged wiring. Defective battery pack: Measure battery voltage, charge or repair as needed. Defective ON switch: Bridge switch to see if unit turns on. Defective circuitry: Replace control panel. The power supply may be delivering power, but it might be eaten up with a defective circuit board or cable. Unplug the load cell cable. If the scale turns on at this point, a load cell lead is shorted. Turn the power off and try each cell lead in turn. If it is the load cell cable, look for a crushed cable.	
Symptom	**Power up to random display**
We know that some power is reaching the display driver circuit, but the control panel is not working correctly. Test for low battery voltage. Inspect for visible damage. If this fails replace the control panel.	
Symptom	**Scale shuts off**
If the scale turns off IMMEDIATELY after you take your finger off the off button, you may have very low batteries. If this is not the cause replace the control panel.	
Symptom	**"Locks up"**
The scale may be programmed incorrectly. This can be corrected by restoring the correct control parameters. If the Average Rate setting is very high, an active load may not update the display quickly which may be interpreted as a lock up	
Symptom	**No backlight**
Cover the light sensor window. If the light does not turn on, replace the control panel. Please note that the light is not visible in bright sunlight.	
Symptom	**Slow operation**
This may be caused by a programmed change in the filter setting. There is a tradeoff between speed and stability of the display reading. This can be tuned by changing the “Average Rate” setting.	
Symptom	**Low battery indicator won't turn off**
It is possible that the battery output is very low. Check battery voltage level and replace if needed. If the battery voltage is correct then you will need to replace the control panel.	
Symptom	**Jumpy or drifty weights**
This can usually be traced to contamination on circuit boards or a bad load cell. This can also be caused by a rapid change in temperature. The scales need at least one-hour acclimation time for each 10 degrees Fahrenheit of temperature change. Another possibility is powerful radio interference.	
Symptom	**No response to one or more keys**
The switch may be defective. The control panel may be defective. The zero button does not function while the scale is in motion, this is not a defect. Also, the scale may be programmed to ignore the zero button if there is more than a certain amount of weight on the platform.	
Symptom	**"Bad" weights**
First, check weighing technique. Is the scale set on the wrong units settings? Is the reference scale correct? Assuming all this, is the scale spanned correctly? If the reading is exactly 3/4 of the expected value, one of the cells leads may not be providing signal. This would probably be in the load cell or control circuit. The interconnecting wiring or cables may be pinched, cut or crushed.	

Caution: Changing any circuit board or load cell will affect the calibration. The calibration should be checked after any repairs.

Error Messages

Error messages, displayed in priority order:

Message	Meaning
' --- '	**Motion detected while attempting to ZERO/TARE/PRINT**
This and the 'MOTION' segment will briefly show if there is motion while attempting to set zero, set tare, or print ticket. Note that checking for motion can be disabled in the calibration menu 'Motion Detect'. However, checking for motion is required in NTEP applications.	
'Ac.Err'	**Motion detected while attempting to Accumulate Total**
This will briefly show if there is a restriction when attempting to accumulate to total: 1. Weight must return to zero in between weight accumulations. 2. Weight must be greater than zero to accumulate. 3. Weight must be stable (not in motion) to accumulate. If the reason for not allowing an accumulation is due to motion, the 'MOTION' segment will also display during the error code display. Note that checking for motion can be disabled in the calibration menu 'Motion Detect'. However, checking for motion is required in NTEP applications.	
'EEPE'	**EEPROM FAILURE Calibration information lost or corrupted**
Calibration information is held in a special permanent memory area. A checksum code is generated and written to this memory during the calibration process. Each time the power is turned on this code is regenerated and compared to the stored value. If a change is found this error message is displayed. Recalibration may clear the error display, but if the problem persists the control panel will have to be replaced.	
'Ad 1'	**A/D converter failure**
The A/D circuit board has indicated a fault and needs to be repaired or replaced.	
'LCb 1'	**Power-up Self Test has detected a load cell errors**
The load cell may have failed or there is a bad connection.	
'LC 1'	**Run-time checking has detected a load cell errors**
The load cell may have failed or there is a bad connection.	
'Lo.bAt'	**Low battery voltage**
This message indicates that the control panel has measured the battery voltage and found it to be too low. The most likely cause is that the batteries need to be changed. If a new set of batteries fail to correct the situation, then the control panel may need to be replaced. Also check the battery holder and wiring.	
'CAP'	**Overload or calibration information lost or bad load cell**
The control panel has detected a weight reading that is larger than expected. This may be caused by the application of too much weight to the platform. If this display is seen when there is no weight on the platform, then the most likely causes are a defective load cell or defective control panel. To isolate the problem, measure the signal across pins two and three on the load cell connector on the control panel. This should be between zero and one millivolt. If found to be higher or lower, then the load cell system must be checked. See procedure elsewhere in this manual. If the signal is within this range then the calibration data may be lost. Attempt to recalibrate the scale. If this does not clear the problem, then replace the control panel.	
'2Er0.r'	**Zero Range Error**
Scale tried to zero off a load outside the range specified in the zero range setting. Remove any load and press zero.	

Calibration Menu Skip "StEP"

Cal Mode #	Enter Cal Mode # After "StEP" in Cal Menu
000	Advance through normal calibration menu.
001 or 002	Jump to weight calibration
005	Enter Mode menu. (the same menu that is entered if the cal strap is in the Run position)
121	Raw Counts display diagnostic
131	Constant power to all load cells diagnostic
311	Default and save all radio settings to the radio
711	Default and save all settings (Leave calibration untouched)
911	Default and save all board memory (settings and calibration)

Parts and Accessories

Diagram: 2K lb capacity models

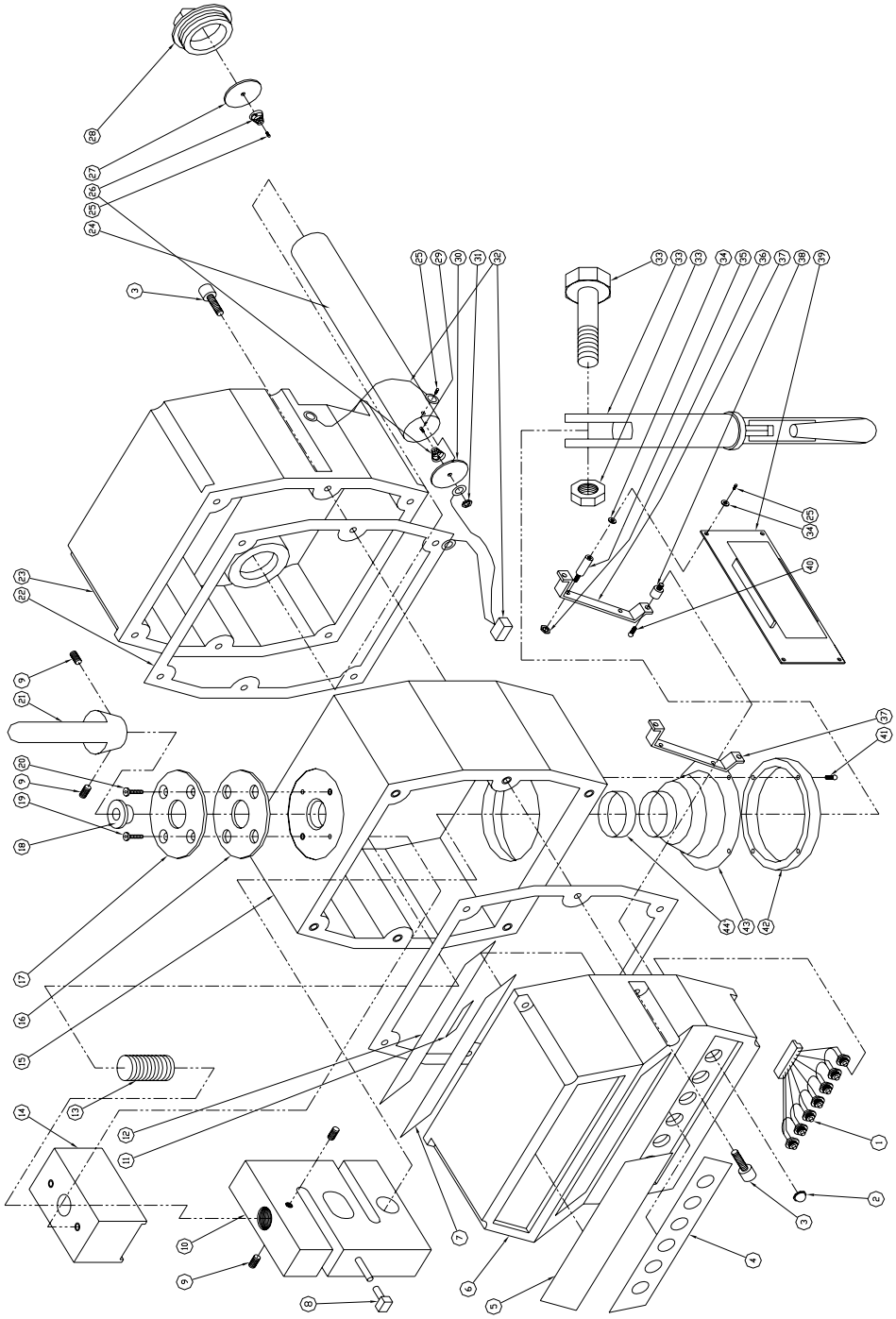

Please see following page for parts table

Parts List: 2K lb capacity

Item #	QTY	Part #	Description
1	1	000072	control harness
2	6	250058	button cover
3	12	---	.375-16 screw
4	1	250089	keypad overlay
5	1	250090	logo overlay
6	1	500804	CS3000 display end
7	1	250095	window overlay
8	1	220063	4-pin MTA
9	4	---	.25-20 set screw
10	1	000062	loadcell (2K capacity CS3000)
11	1		insert
12	1	500817	display window
13	1	500838	loadcell threaded adapter
14	1	500739	loadcell retainer
15	1	500824	loadcell housing
16	1	500710	retaining ring gasket
17	1	500709	top retaining ring
18	1	500713	retaining ring spacer
19	2	---	.25-20 screw
20	2	---	.25-20 screw
21	1	601039	eye nut
22	2	500805	housing gasket
23	1	550153	end plate
24	2	500707	battery tube
25	20	---	6-32 screw
26	4	330042	battery spring
27	2	500706	battery plate
28	2	500705	battery cap
29	2	---	8-32 screw
30	2	500708	battery tube end
31	2	601047	wing nut
32	1	000075	battery harness assembly
34	1	603035	swivel hook assembly
36	16	601014	.031 nylon washer
37	4	601032	6-32 m/f standoff
38	4	601002	6-32 nut
39	2	500808	board mount
40	4	601028	vibration mount
41	1	000980	CS3000 circuit board assembly
42	4	601015	.062 nylon washer
43	4	---	8-32 screw
44	4	601018	6-32 standoff
47	4	---	8-32 unc screw
48	1	500803	lower retaining ring
49	2	500818	bellows
50	1	820027	hose clamp

Diagram: 5K lb, 10K lb capacities

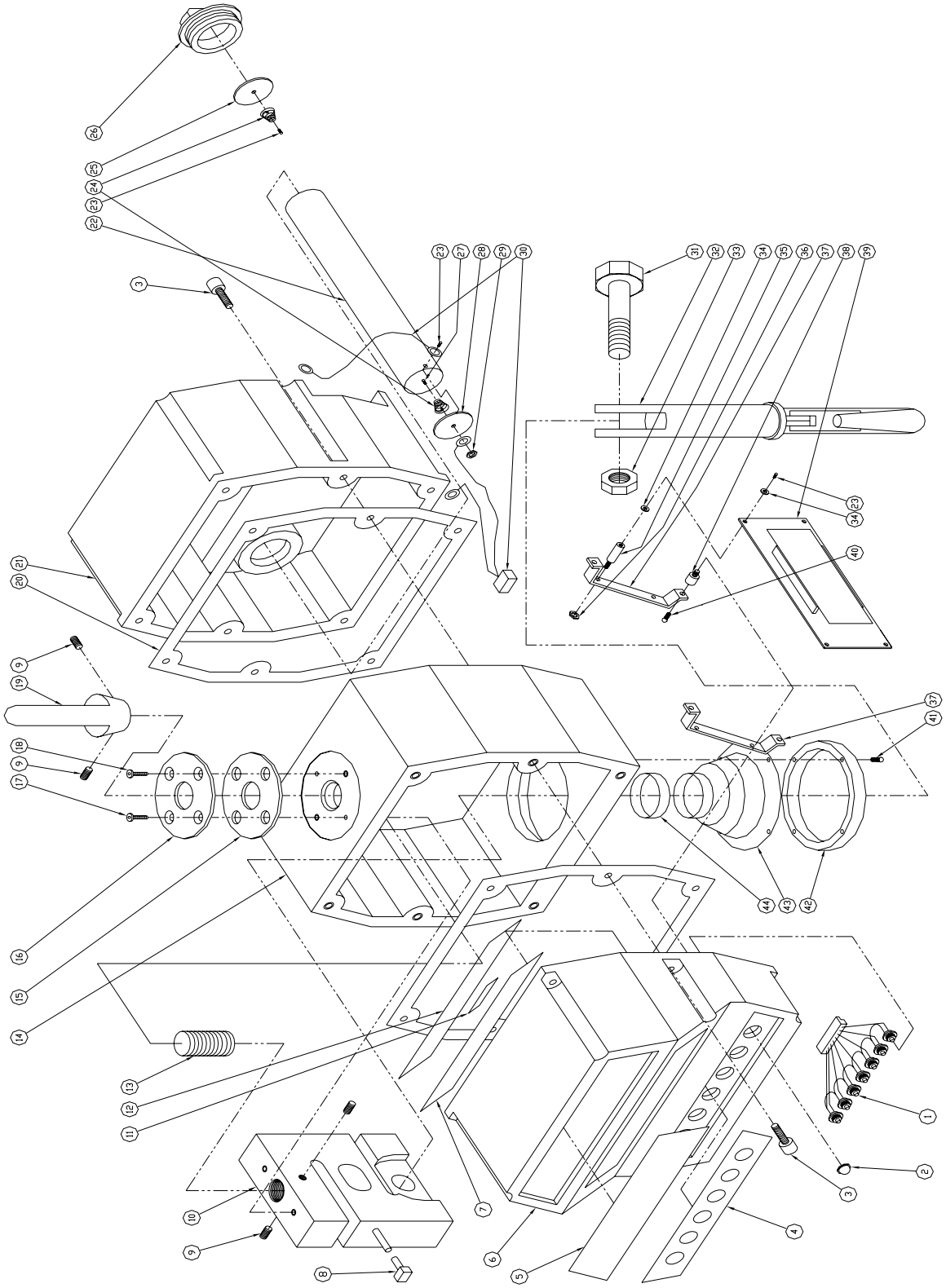

See the following page for parts list

Parts List: 5K lb, 10K lb capacity

Item #	QTY	Part #	Description
1	1	000072	control harness
2	6	250058	button cover
3	12	---	.375-16 screw
4	1	250492	keypad overlay
5	1	250090	logo overlay
6	1	502575	CS3000 display end
7	1	250005-B	window overlay
8	1	220063	4-pin MTA
9	4	--	.25-20 set screw
10	1	000073	loadcell (5K and 10K capacity CS5000)
11	1		insert
12	1	505483	display window
13	1	500740	loadcell threaded adapter
14	1	500984	loadcell housing
15	1	500710	retaining ring gasket
16	1	505482	top retaining ring
17	2	---	.25-20 screw
18	2	---	.25-20 screw
19	1	500754	eye nut
20	2	500805	housing gasket
21	1	550153	End plate
22	2	502627	battery tube
23	20	---	6-32 screw
24	4	330042	battery spring
25	2	500706	battery plate
26	2	500705	battery cap
27	2	---	8-32 screw
28	2	500708-B	battery tube end
29	2	---	wing nut
30	1	000075	battery harness assembly
31	1	500791	assembly screw
32	1	500791	swivel hook assembly
33	1	500791	assembly nut
34	16	---	.031 nylon washer
35	4	601315	6-32 m/f standoff
36	4	601002	6-32 nut
37	2	500807-B	board mount
38	4	601310	vibration mount
39	1	000980	CS3000 circuit board assembly
40	4	---	8-32 screw
41	4	600015	8-32 unc screw
42	1	500803	lower retaining ring
43	2	500818	bellows
44	1	820027	hose clamp

Diagram: 20K lb, 30K lb capacities

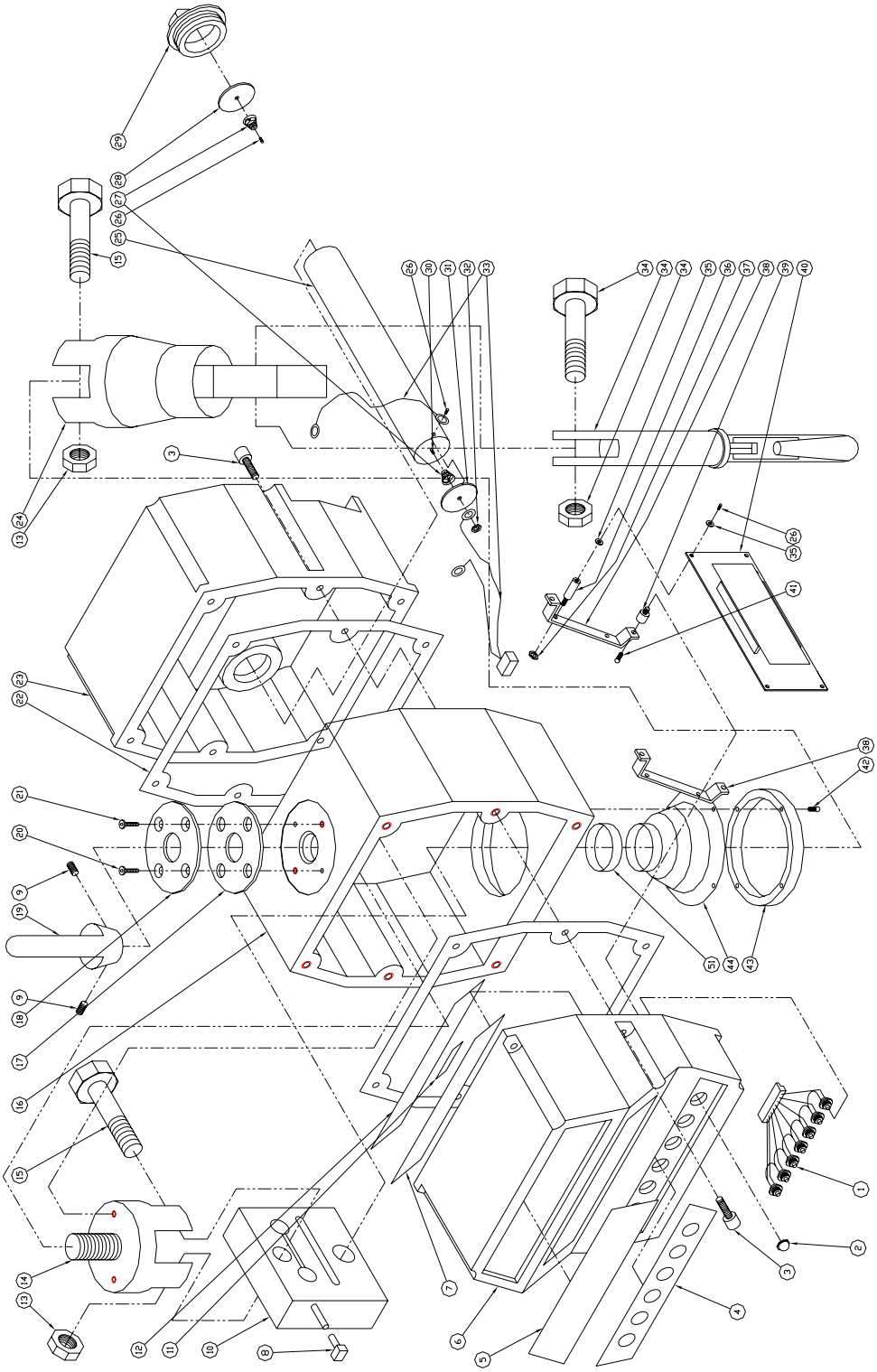

Please see following page for parts list

Parts List: 20K lb, 30K lb capacity

Item #	QTY	Part #	Description
1	1	000072	control harness
2	6	250095	button cover
3	12	---	.375-16 screw
4	1	250492	keypad overlay
5	1	250090	logo overlay
6	1	502575	CS3000 display end
7	1	250095	window overlay
8	1	220063	4-pin MTA
9	4	---	.25-20 set screw
10	1	000073 000063	loadcell (20K capacity CS3000) loadcell (30K capacity CS3000)
11	1		insert
12	1	505483	display window
13	1	601051	1-8 locking nut
14	1	500813	top loadcell adapter
15	2	602008	1-8 bolt
16	1	500824	loadcell housing
17	1	500710	retaining ring gasket
18	1	500709	top retaining ring
19	1	601039	eye nut
20	2	---	.25-20 screw
21	2	---	.25-20 screw
22	2	500805	housing gasket
23	1	550153	end plate
24	1	500946	lower loadcell adapter
25	2	500707	battery tube
26	20	---	6-32 screw
27	4	330042	battery spring
28	2	500706	battery plate
29	2	500705	battery cap
30	2	---	8-32 screw
31	2	500708	battery tube end
32	2	601047	wing nut
33	1	000075	battery harness assembly
35	1	603063 603038	swivel hook assembly (20K) swivel hook assembly (30K)
37	16	601014	.031 nylon washer
38	4	601032	6-32 m/f standoff
39	4	601002	6-32 nut
40	2	500808	board mount
41	4	601310	vibration mount
42	1	000980	CS3000 Circuit Card assembly
43	4	601015	.062 nylon washer
44	4	---	8-32 screw
45	4	601315	6-32 standoff
48	4	600015	8-32 unc screw
49	1	500803	lower retaining ring
50	2	500818	bellows
51	1	820027	hose clamp

How to reach Intercomp Service

Things to know:

1. The service is for a CS3000 crane scale.
2. When did you purchase your scale?
3. What is your serial number?
4. Whom did you purchase the scale through?

For Intercomp Service call or fax:

FAX # (763)-476-2613
(763)-476-2531
1-800-328-3336

or fill out Service Support form at:

www.intercompcompany.com